PRODUCT SPECIFICATIONS

HBDVSC(7)300 Direct Vent Gas Fireplace

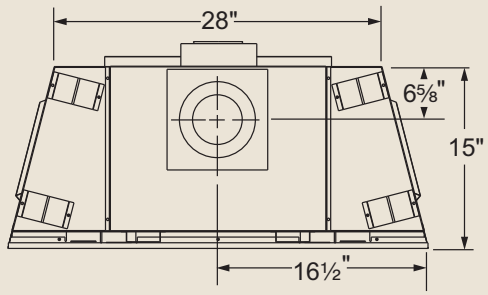

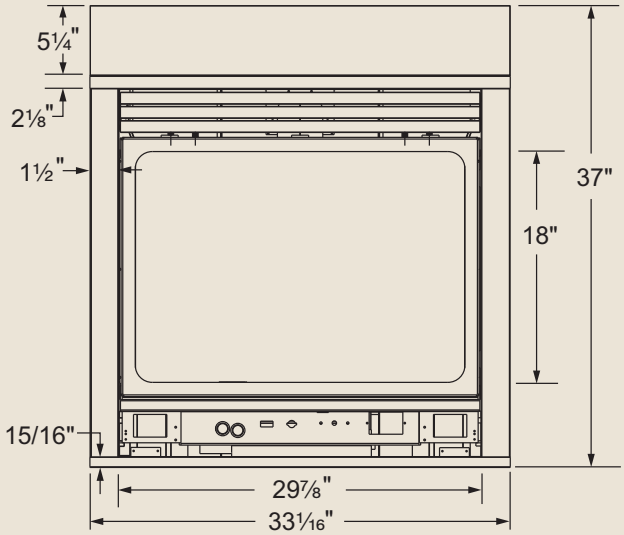

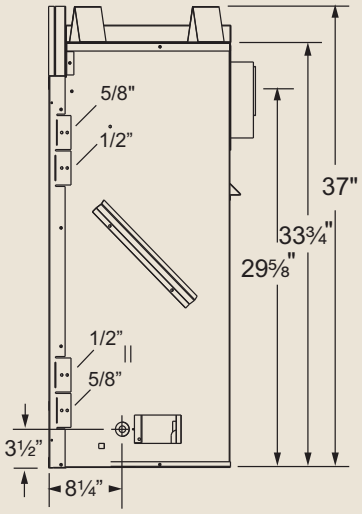

GLASS VIEWING AREA

27"W x 18"H (486 Square Inches)

TECHNICAL INFORMATION

Max. Btu Input: 23,000 BTU/HR

Ignition System: Signature Command System

Gas Type: Natural or LP

Illustrated consumer-friendly deluxe control panel with easy lift off capabilities

Flue Type: MHSC T-Lock Pipe

Termination: Rear/Top Vent Convertible

Clearance to Flue for Interior: 3" Top, 1" Bottom and Sides**

Clearance to Flue for Outside Wall: 1"

Clearance to Fireplace: 1/2"

CSA Design Certified

FIELD INSTALLED ACCESSORIES

Louver: Pewter and Brass

Curved Trim: Brass, Pewter, Black

Medium Trim Kit: Brass, Pewter, Black

Designer Facings Available

Variable Thermostat Controlled Forced Air Blower (160 cfm): BLOT BLOTSC

Firebrick: Cottage Clay or Cottage Red*

Classic and Manor faces available

Mesh Glass Cover

Ambient Technologies™ Remote Controls and Thermostats

*Note: Firebrick is required for all HBDV models.

** If vertical rise is 7-1/2 feet or higher when in top vent configuration only, the vent clearance to combustibles is 1" on all sides of the horizontal run.

LIMITED LIFETIME WARRANTY

MADE IN U.S.A.

A Brand of Monessen Hearth Systems Co.
149 Cleveland Drive, Paris, Kentucky 40361
www.monessenhearth.com

Monessen

To avoid personal injury or property damage, the product described by this brochure must be installed, operated and maintained in strict compliance with the instructions packaged with the product and all applicable building or fire codes. Contact local building or fire officials about restrictions and installation inspection requirements. All photographs and drawings on this brochure are for illustrative purposes only and are not intended for, nor should they be used as a substitute for the instructions packaged with the unit. Appearance and specifications of the product are subject to change without notice. © 2010 Monessen Hearth Systems Co.